Low Frequency Eddy Current Testing for Subsurface Cracks in Aluminum Aircraft Supports

N. Alatawneh, P.R. Underhill, and T.W. Krause

Department of Physics, Royal Military College of Canada, Kingston, ON, K7K 7B4

Outline

- Introduction
- Problem definition
- Probe design
- Simulation Results
- Experimental Results
- Conclusion and Future work

Introduction

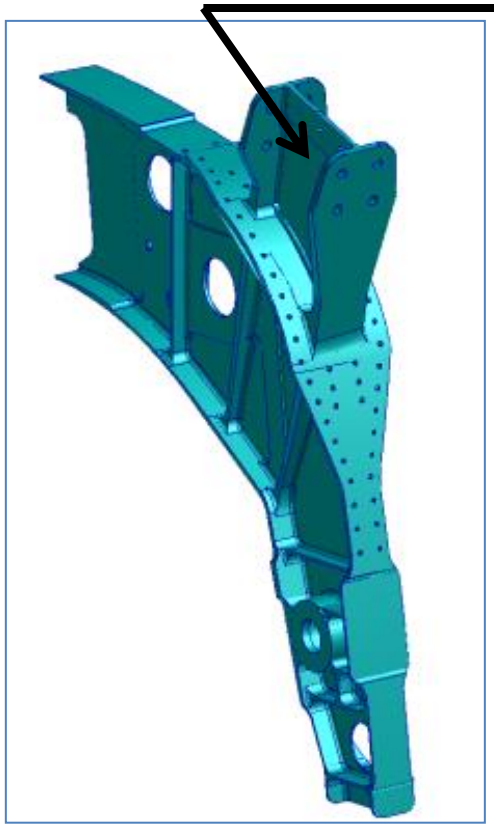

Inspection Surface

Location of CF-188 Stub Flanges on the CF-188 Fighter Jet.

Test Samples - Eyebrow Crack

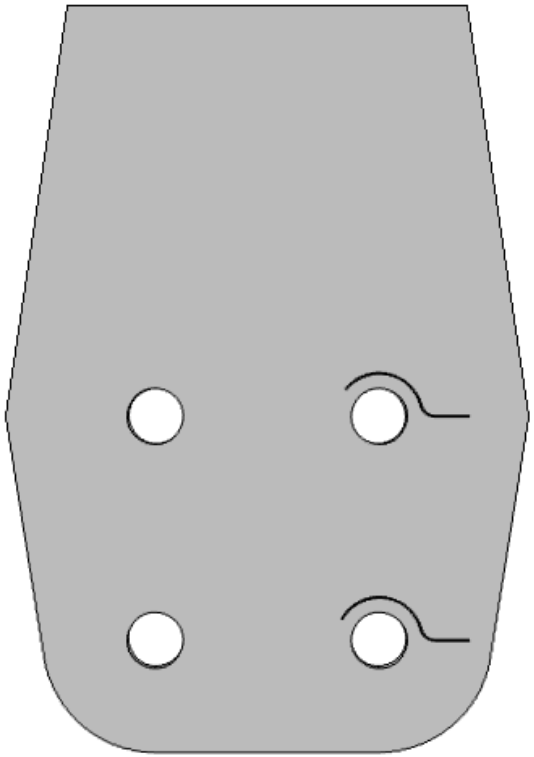

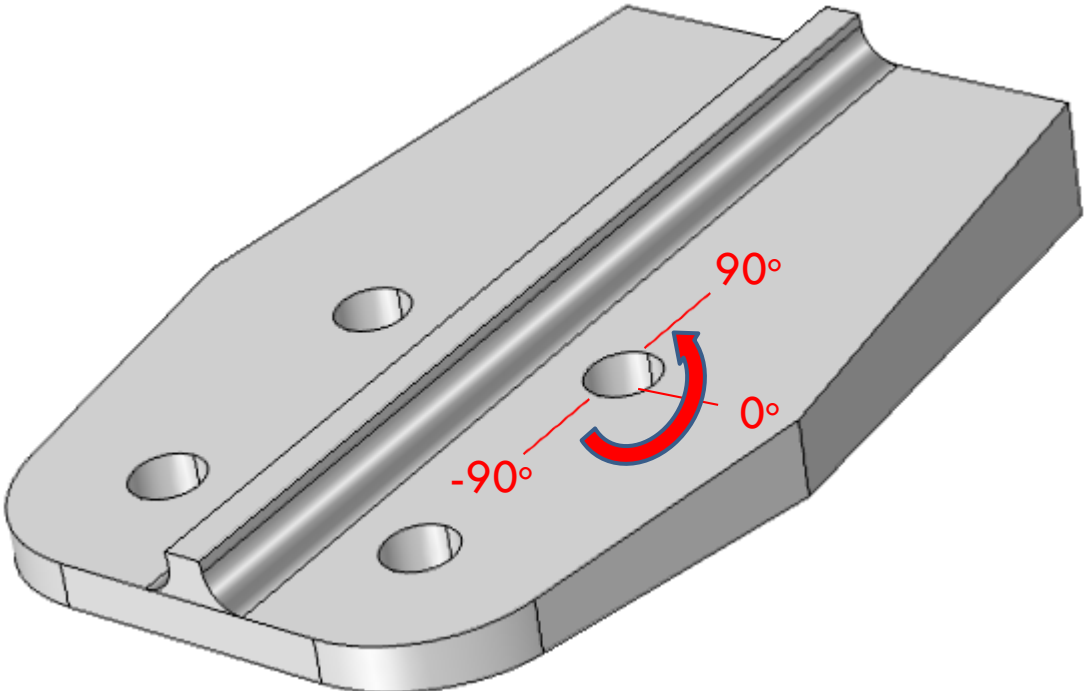

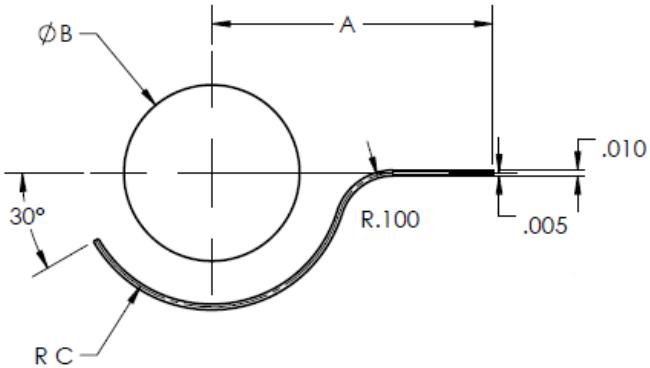

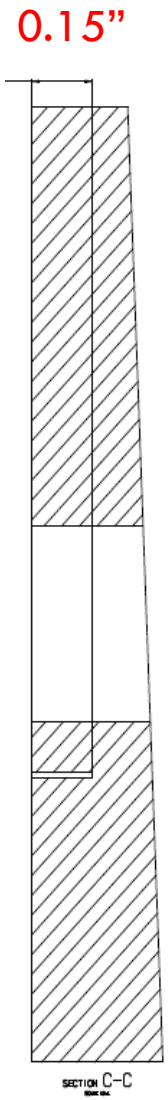

A=0.4”, 0.5”, 0.6”
B= 3/8”
RC= 0.288”
Crack height= 0.15”

Scanning Probe

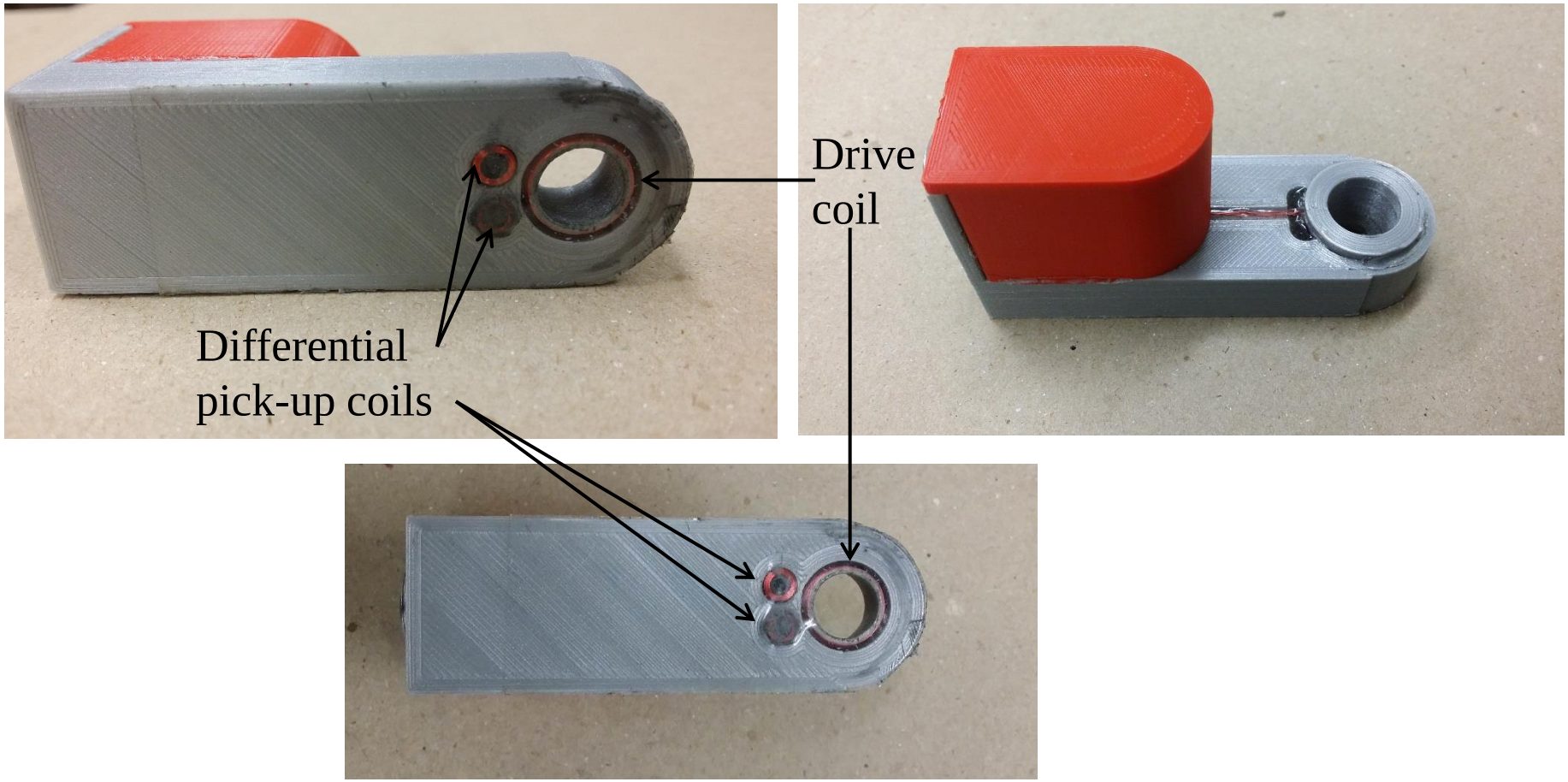

Problem Definition

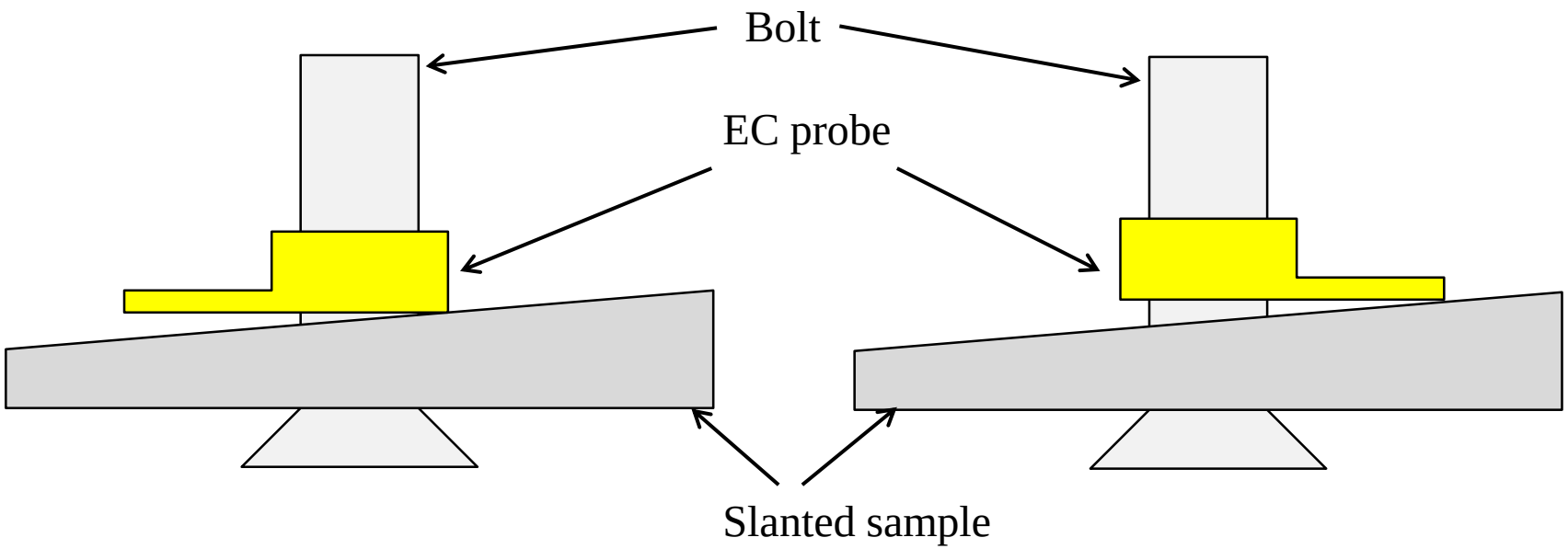

Proposed Solution

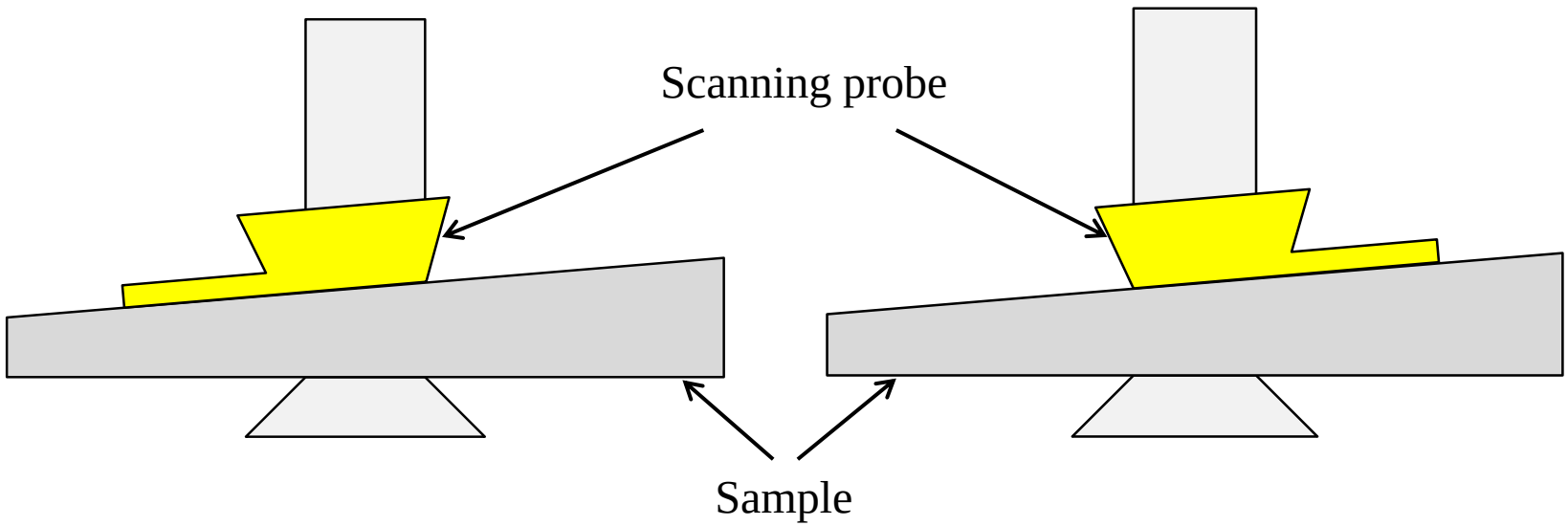

FEM Modeling Using COMSOL

Challenges

- Build the 3D geometry
- Meshing
- Material parameters

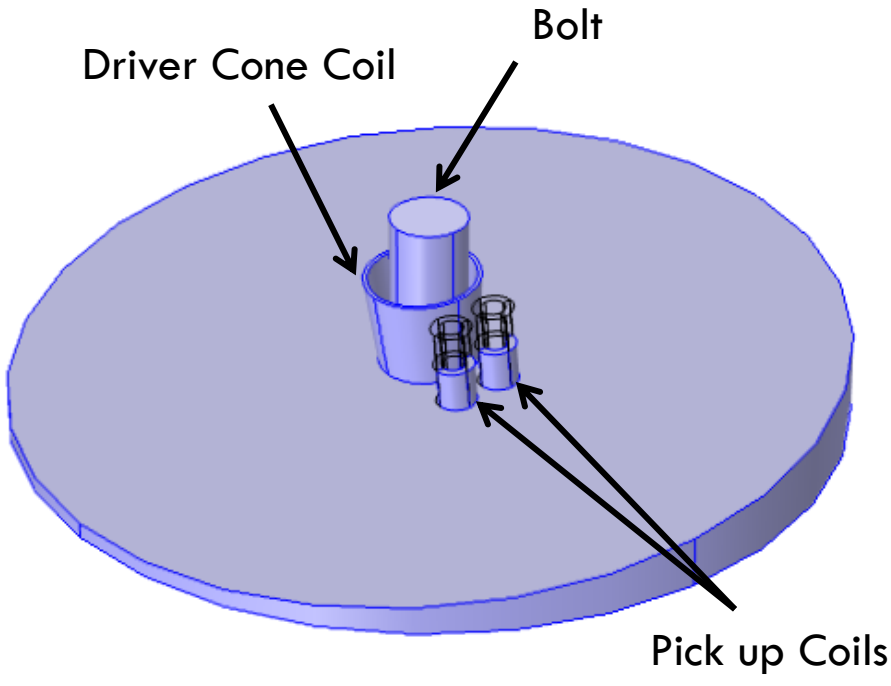

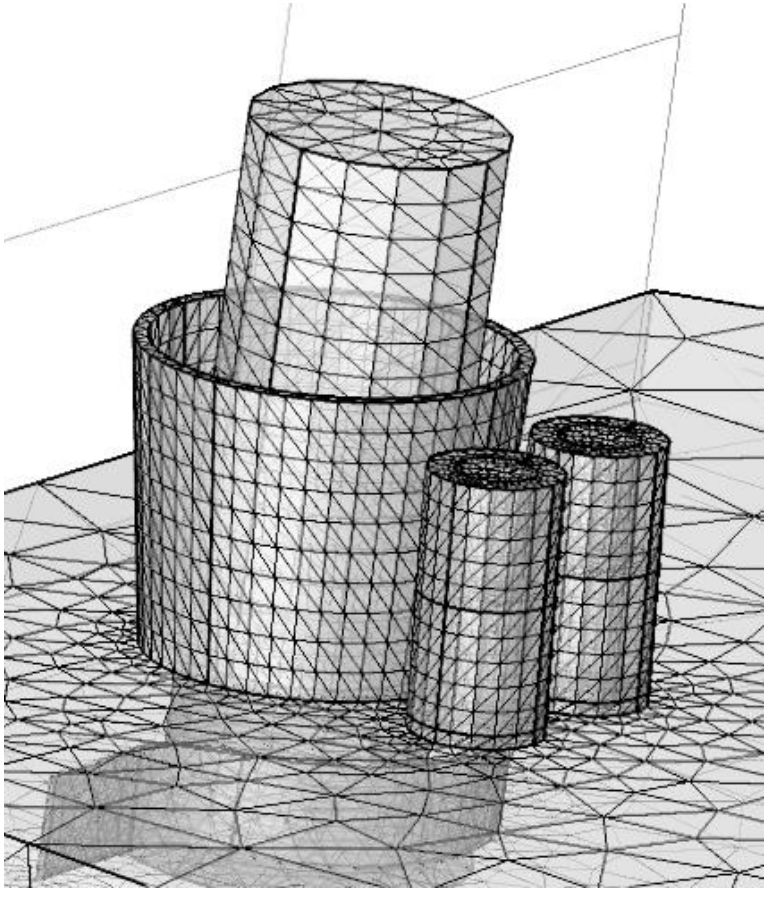

Horizontal Sample VS Slanted Sample

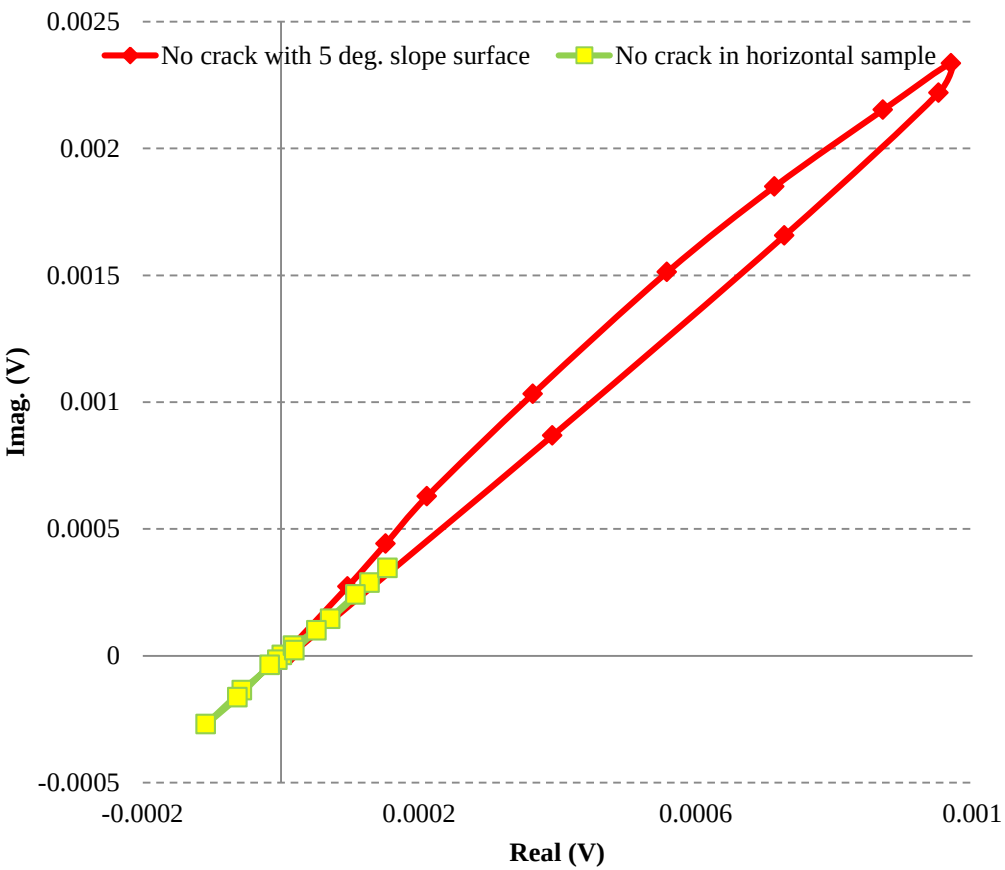

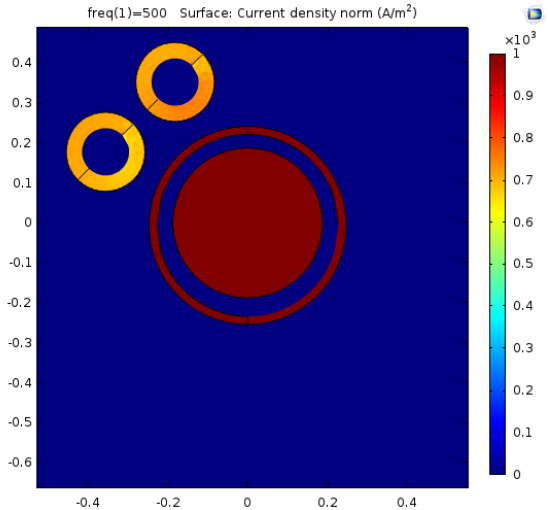

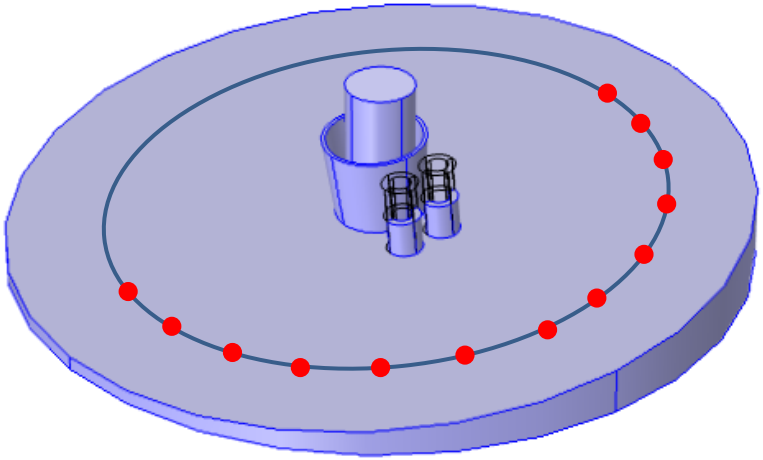

The Response as a Function of Sample Thickness

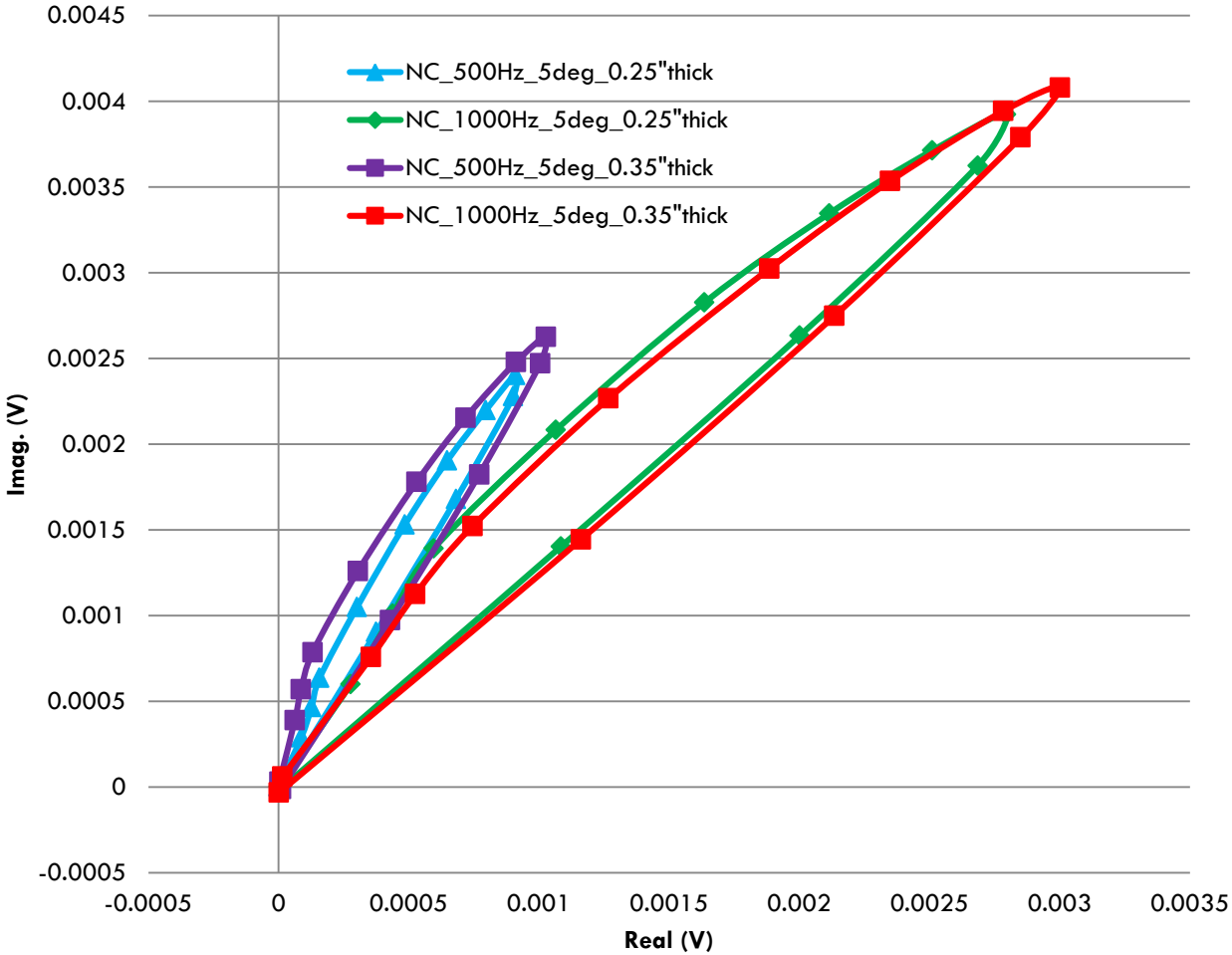

The Response as a Function of Sample Slope

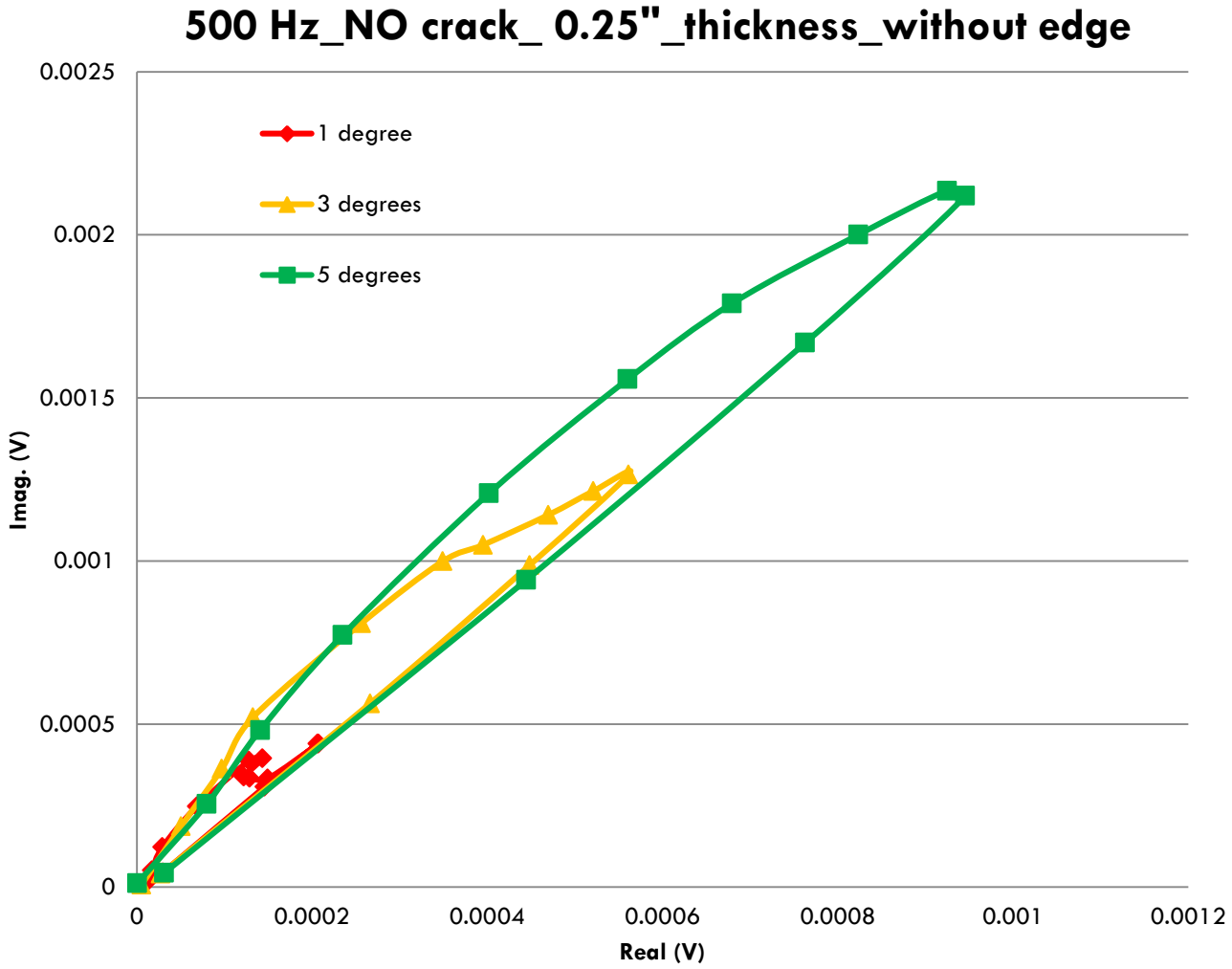

The Response as a Function of Sample Slope

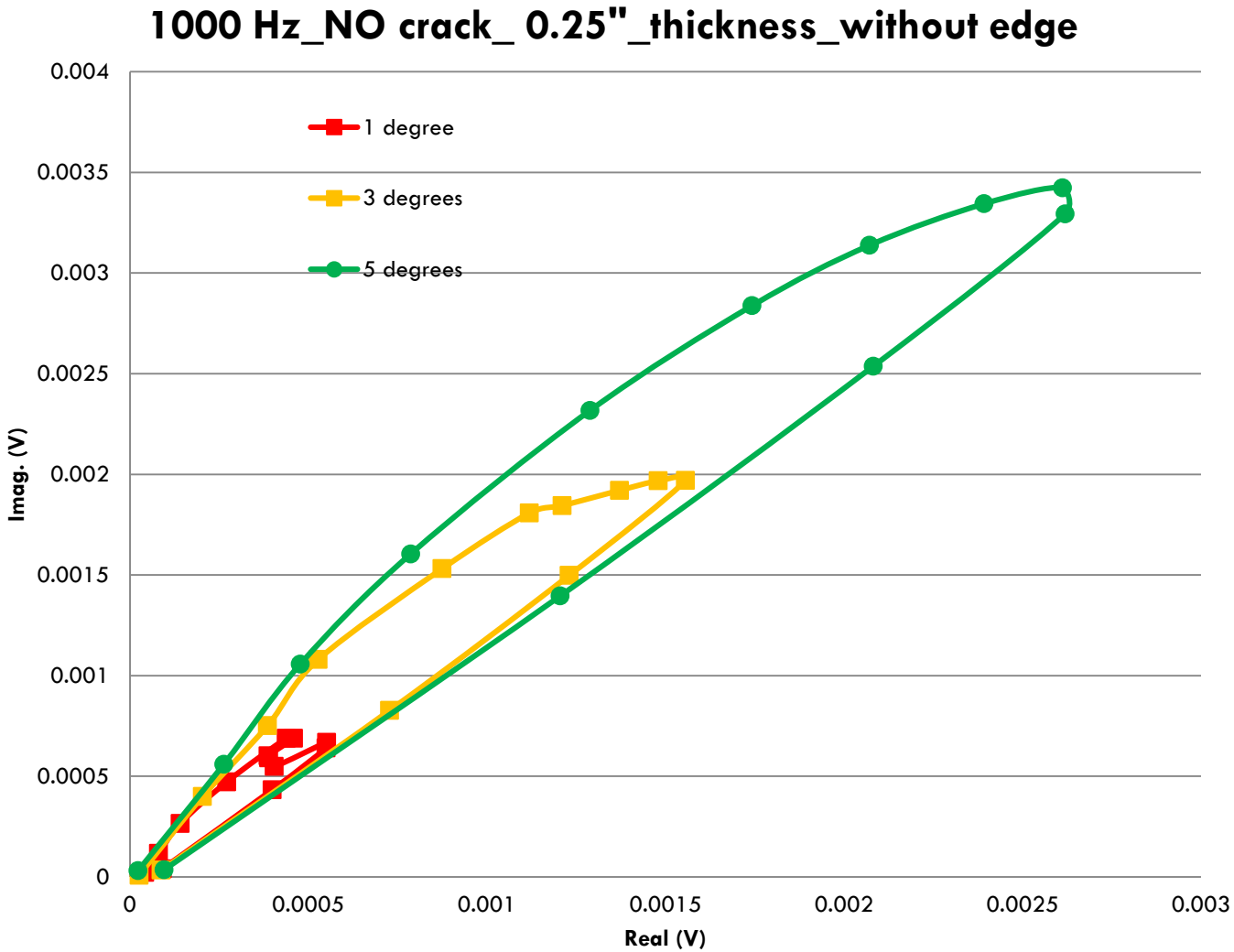

Different Crack Heights for rounded edge sample at 1 kHz

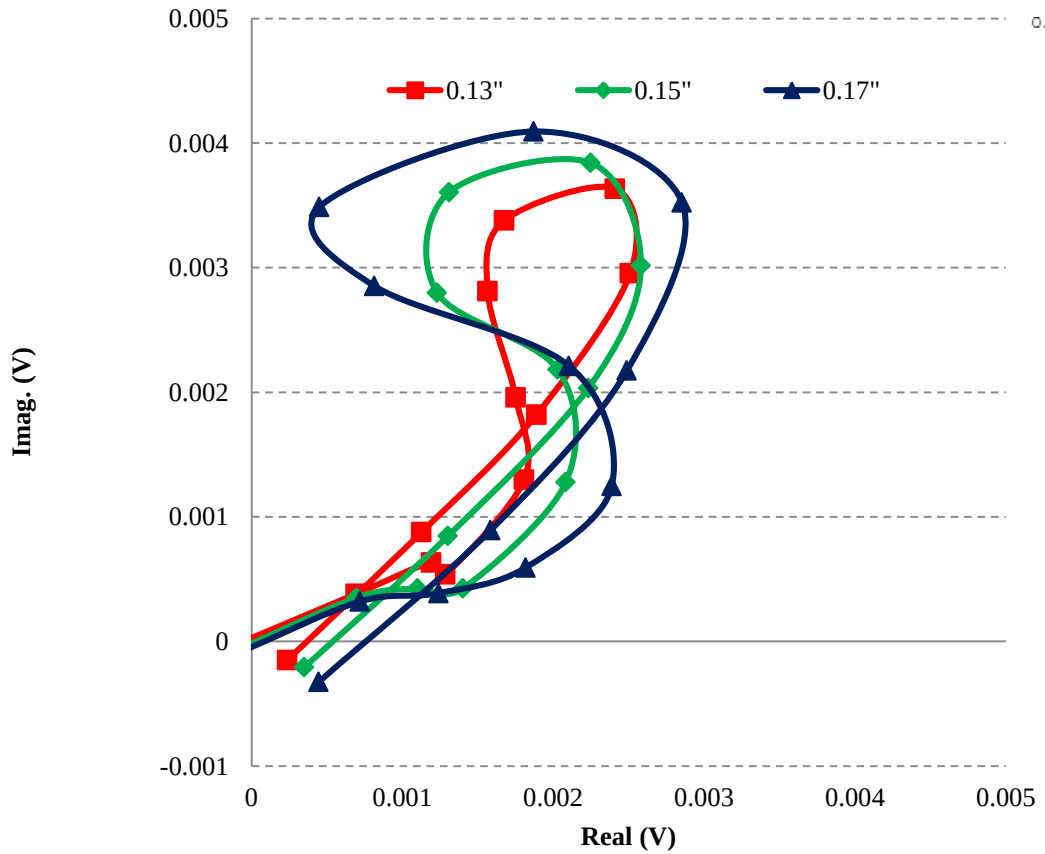

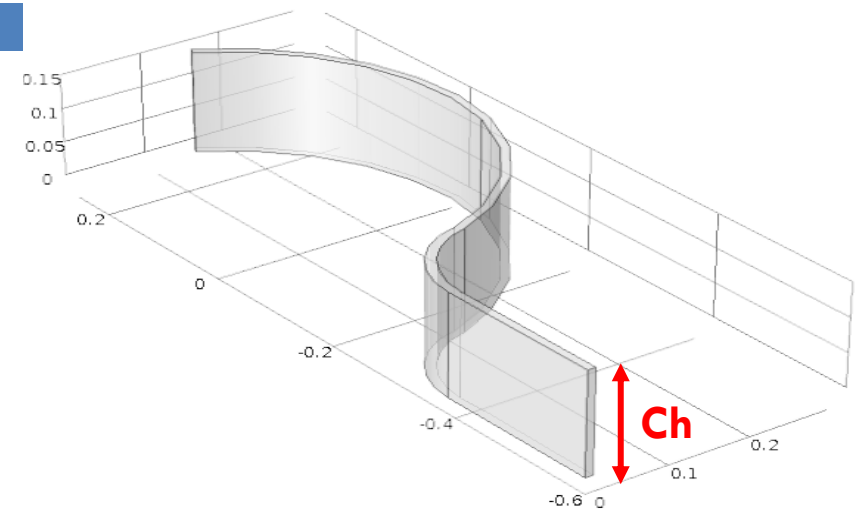

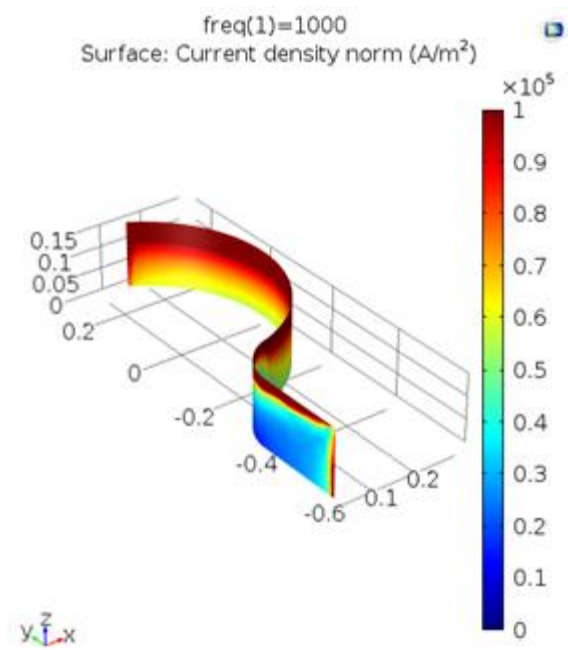

FEM modeling of edge effect

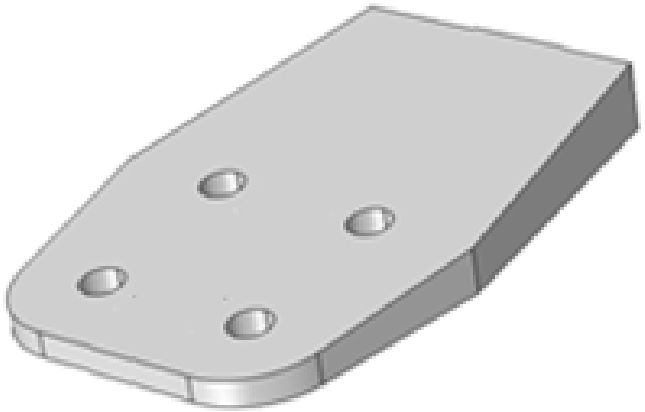

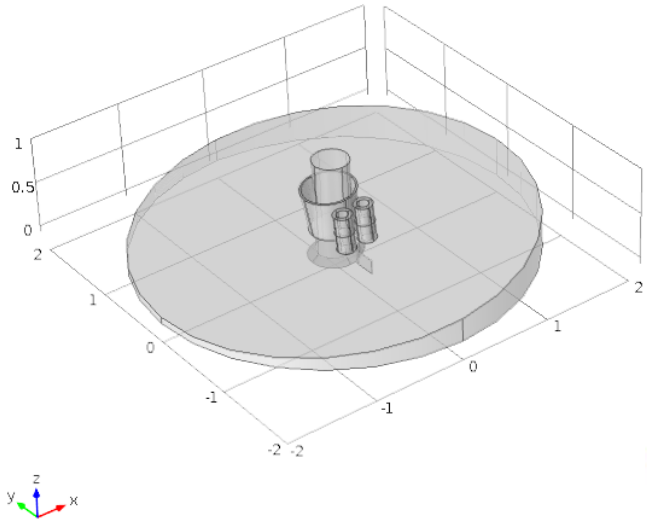

NO Edge

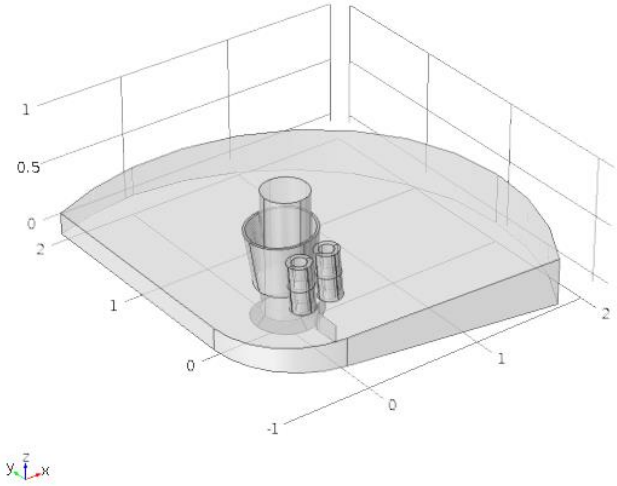

Edge 1

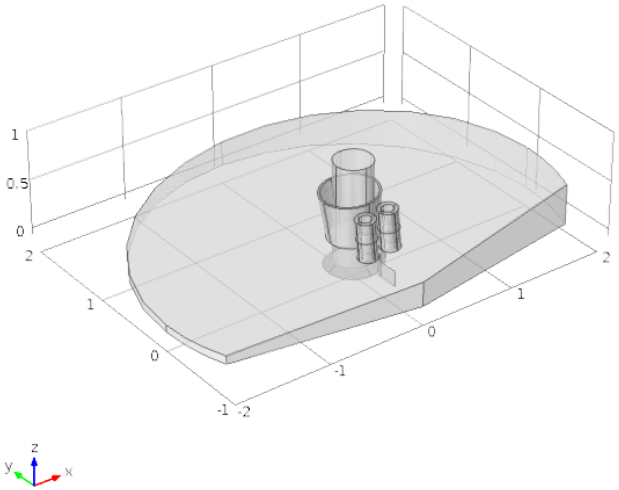

Edge 2

Edge Effect Without a Crack at 1 kHz for height of 0.15”

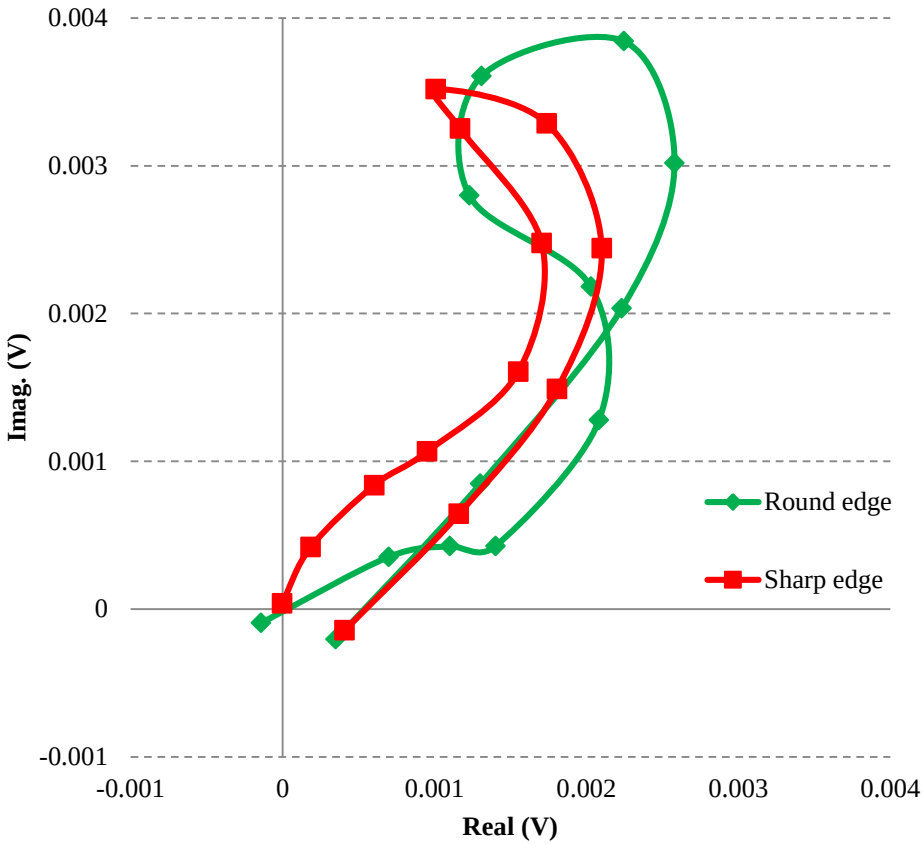

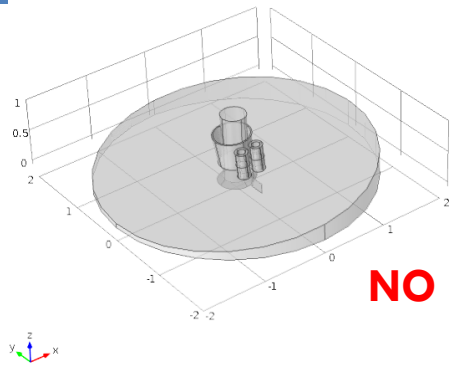

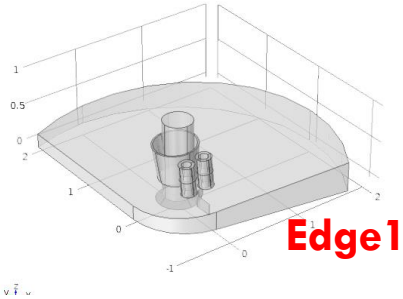

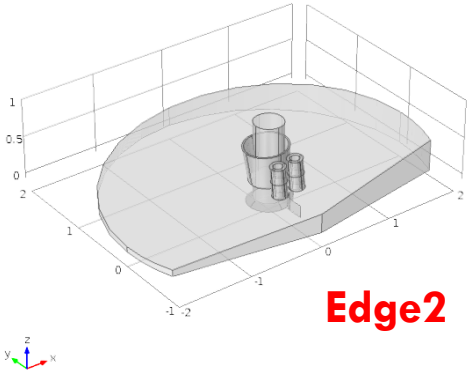

Measurements

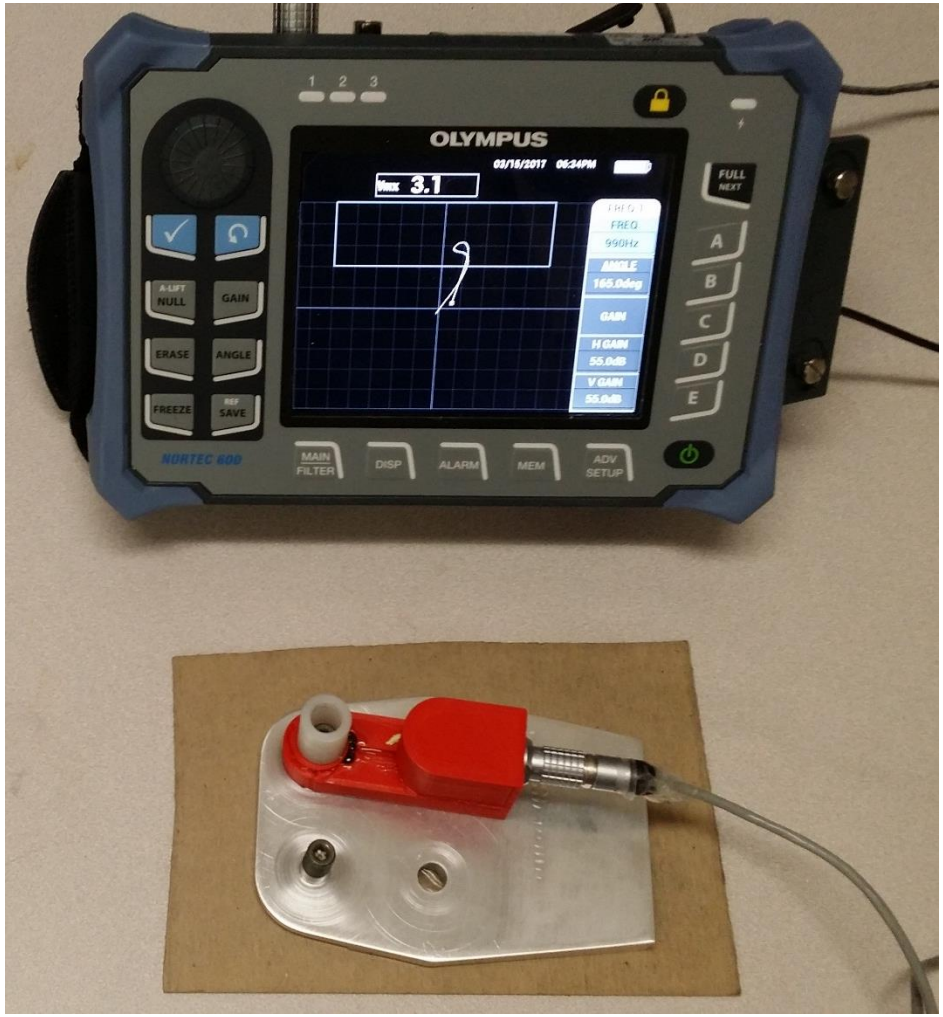

NORTEC 600 D

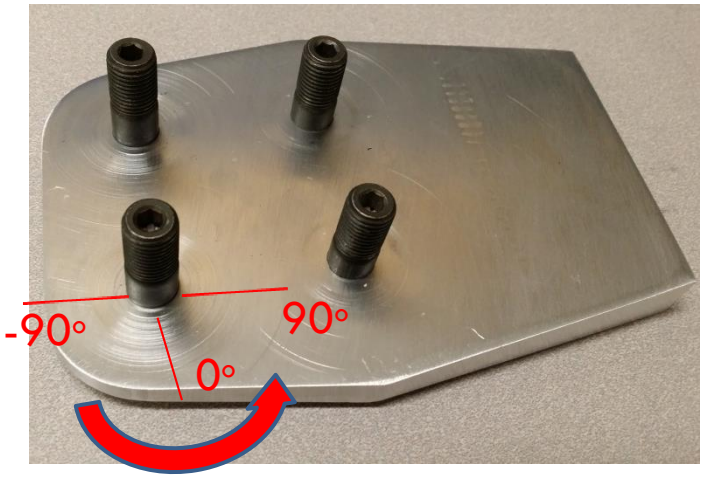

Real Sample

Measurements

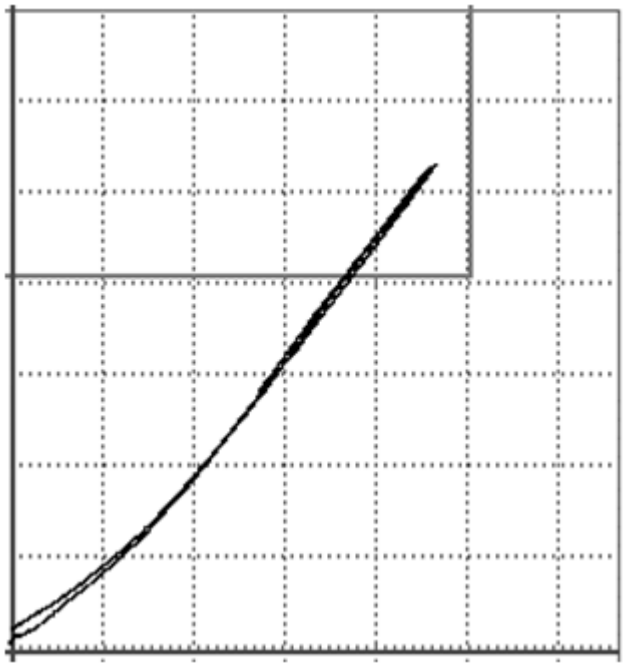

NO crack, 0.15”, rounded edge,
1000 Hz, 60 dB

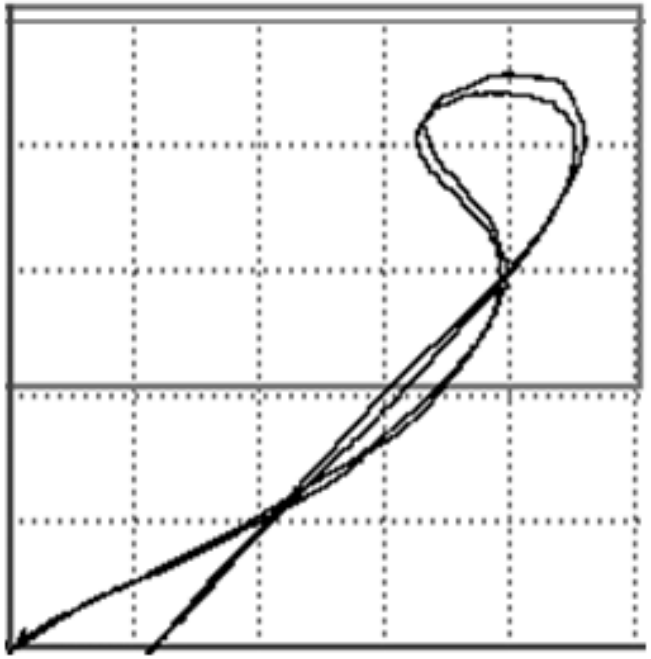

0.6” crack, 0.15”, height, rounded edge,
1000 Hz, 60 dB

Measurements

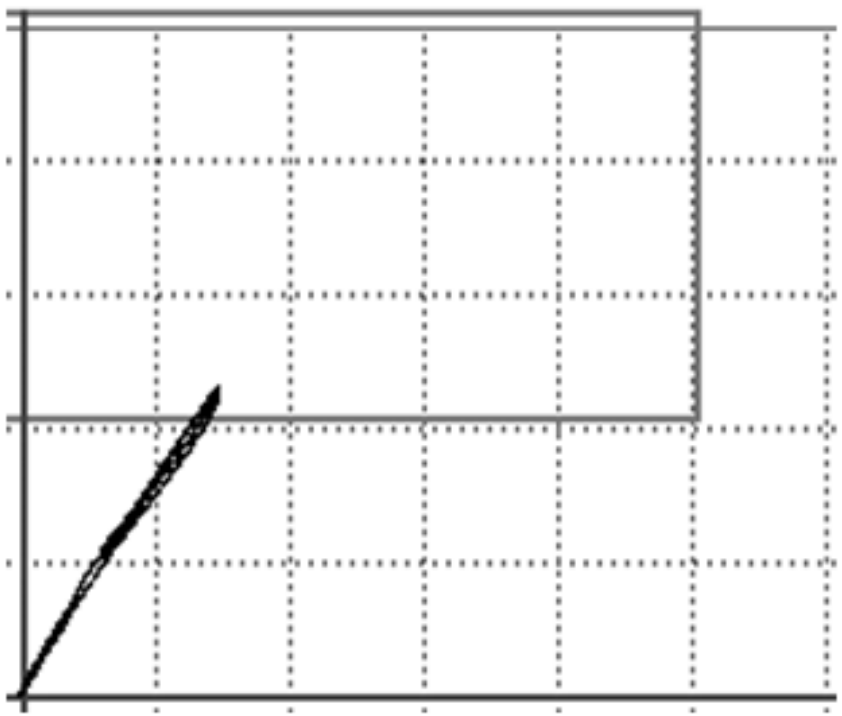

NO crack, 0.15”, rounded edge,
200 Hz, 60 dB

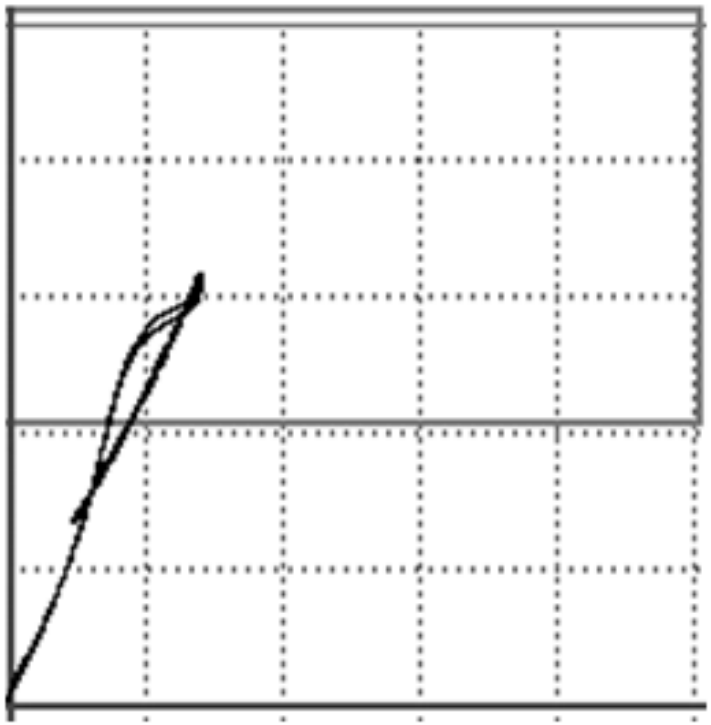

0.6” crack, 0.15”, height, rounded edge,
200 Hz, 60 dB

Conclusions

- Simulations were performed to give information about different geometries and conditions
- Experimental measurements demonstrate ability to size crack in terms of depth and length

Future work

- Refine probe (make thinner, use spherical washer)
- Develop eye brow probe

Thank you!